Fabrication Techniques

MRA Education Day 2018
10/27/18

Mark Edelen, Associate Professor of Engineering
Chair, Engineering & Technology Dept
Howard Community College

Giriraj (Bobby) Nanan
Mechanical Design Team Lead
NASA Goddard Space Flight Center

HOWARD COMMUNITY COLLEGE
You Can Get There From Here.

Agenda

- Introductions
- Motivation
- Decision Process
- Fabrication Methods
  - Options
  - Pros/Cons
- Case Studies
- Key questions to ask/answer about a part
- Resources and Q&A

Motivation

Poor fabrication choices and the consequences.

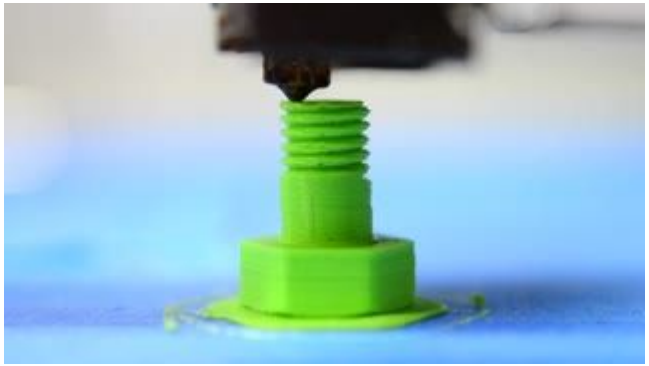

Goal: Make informed, thoughtful decisions before fabricating a part to save time, avoid wasted resources, and improve performance.

Decisions, Decisions

Central question:

How do I choose a fabrication method for a given part?

Closely related question:

How do I choose the appropriate material for a given part?

How does your FRC team make these decisions now?

Decision Tree

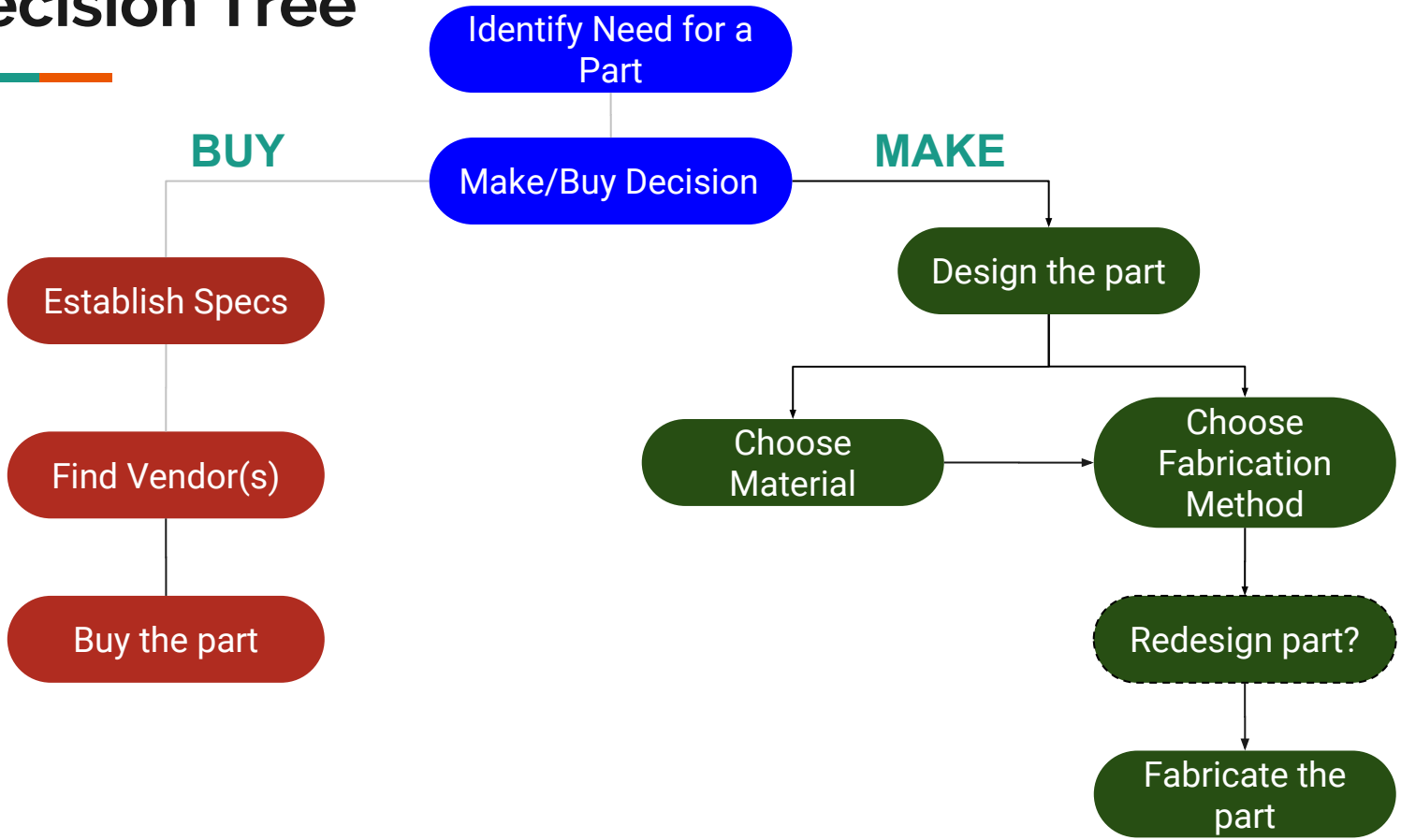

Fabrication Methods

- Tools/Methods
  - Welding & sheet metal forming
  - Woodworking
  - 3D printing
  - Laser cutting
  - Machining (mill, lathe)
  - CNC router
  - And more...
- Factors
  - machine cost (purchase AND operational)
  - material types
  - speed
  - setup time
  - post processing time
  - precision

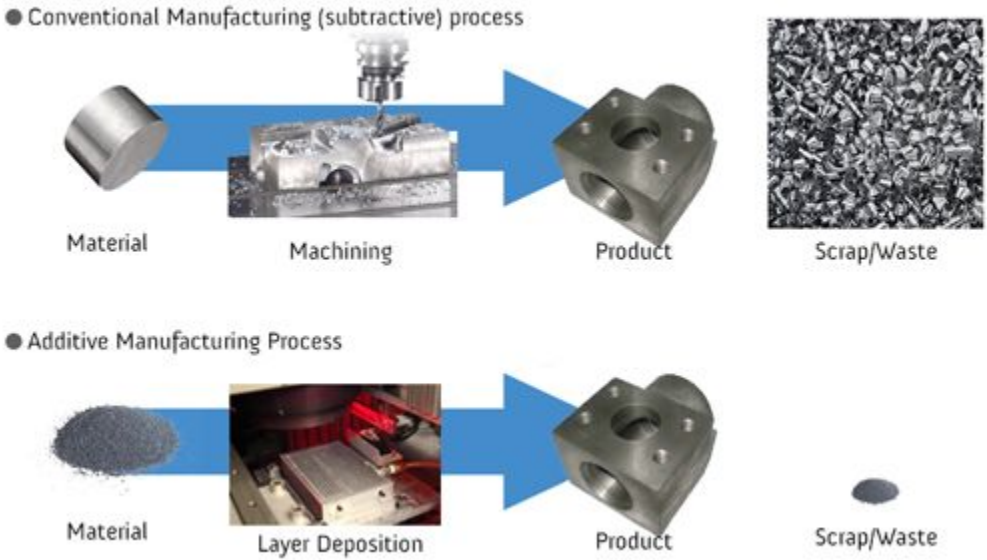

Fabrication Methods - Welding & Sheet Metal

Pros

- Strength
- Durability
- Fabrication speed
- Low equipment and operating costs
- Can build from a sketch

Cons

- Hazards
- Fixturing time
- Low precision
- Material limitations

Notes

- Requires equipment, accessories and compatible facility (ventilation, etc).
- Difficult for a novice to use effectively.
- Welding is an art and a science.

Fabrication Methods - Woodworking

Pros

- LIGHTweight parts
- Forgiving, easy to machine
- Low material and equipment costs
- Can build from a sketch

Cons

- Poor mechanical properties
- Low precision
- Can’t produce small features reliably
- Sensitive to moisture

Notes

- Grain direction can be important!
- Choose your wood wisely.

Fabrication Methods - 3D Printing

Pros

- Complexity is “free”
- Affordable machines produce quality parts
- Polymer options
- Low barrier to entry
- Minimal setup time
- Fast (for complex parts)

Cons

- Poor wear and thermal performance
- Part strength is limited

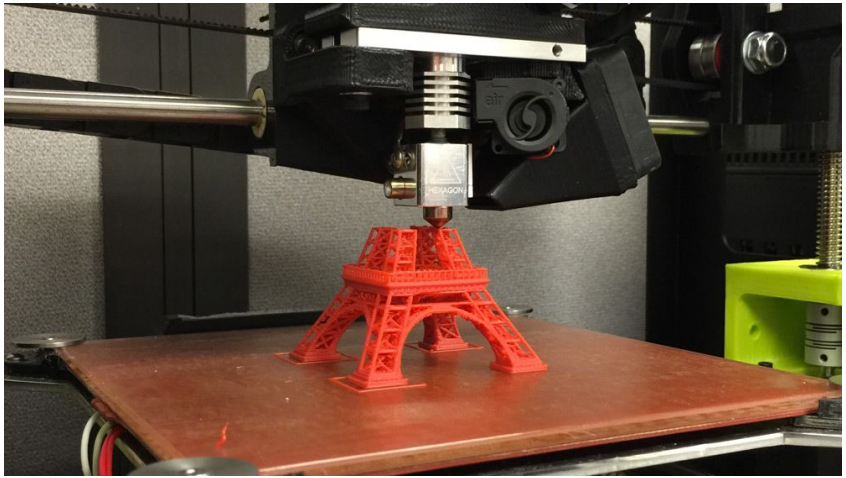

Additive Manufacturing Technology - Certificate (Career)

Application Code 330

For curriculum information, contact the Science, Engineering, and Technology Division—Room SET-430—443-518-1600.

This certificate equips students with creative and technical skills to enter the workforce in a business or industry utilizing additive manufacturing technology. Students will explore a variety of manufacturing technologies, including 3D printing. Students will design, model, and produce parts, gaining hands-on experience with the latest technologies in this field. Fabrication technologies will be studied for uses ranging from rapid prototyping to traditional large-scale production. This certificate will help students prepare for the Society of Manufacturing Engineers' nationally recognized Additive Manufacturing Fundamentals Certificate exam.

Notes

- Low-cost ($3K) printers provide comparable print quality to mid-range ($20K) printers.
- Consider print orientation!
- Design for Additive Manufacturing (DFAM)!

Fabrication Methods - Laser Cutting

Pros

- Very fast fab speed
- High precision
- Minimal post-processing
- Easy to use

Cons

- Limited to 2D geometry
- Material and thickness limitations

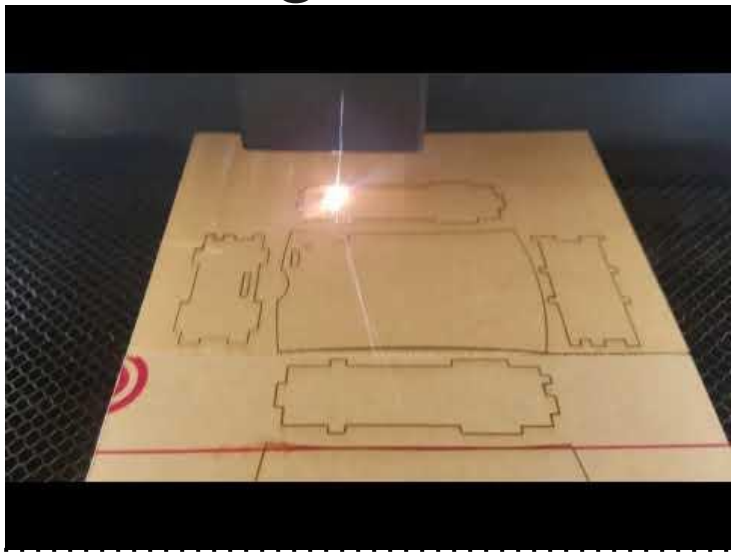

Notes

- Air filtration can add significant cost.

Fabrication Methods - Machining (Mill & Lathe)

Pros

- Strong, durable parts
- Variety of material options (alloys, machinable plastics)
- Can achieve high precision

Cons

- Mistakes can be costly!
- Training is required to use these effectively and safely.
- Setup time
- Machine and tooling costs are significant
- Complexity is not “free”

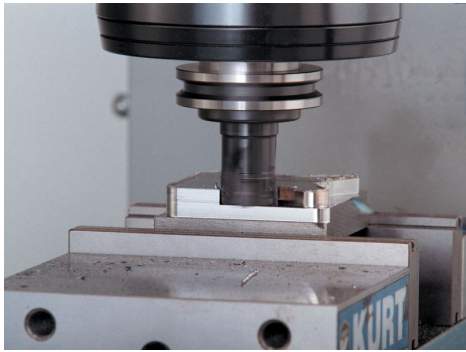

Notes

- Compact mill/lathe combos are affordable.
- Get to know a machinist!

Fabrication Methods - CNC Router

Pros

- Fast build speed
- High precision
- Can achieve 2.5D fabrication

Cons

- Mistakes are costly!
- Moderate to high machine cost ($5K-30K)
- Setup time (hardware and software)

Notes

- Capabilities overlap with laser cutting and milling
- Requires some CAD/CAM training

Case Study #1

Part: Wireless Access Point Mount

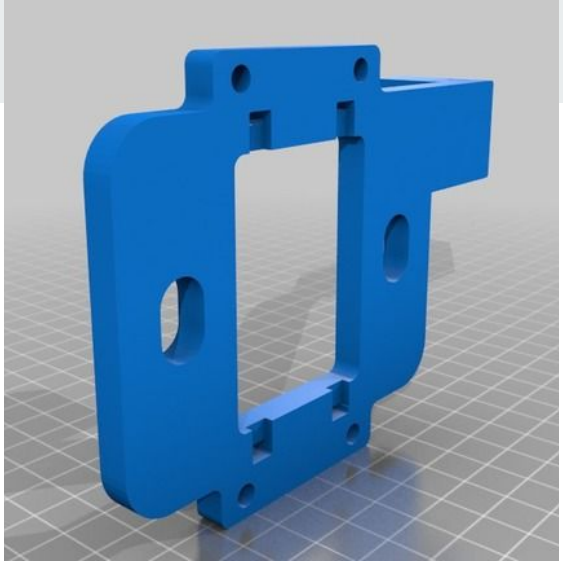

Take 3 minutes to discuss with those sitting near you how you could make this part.

Is there any other information you would want to know?

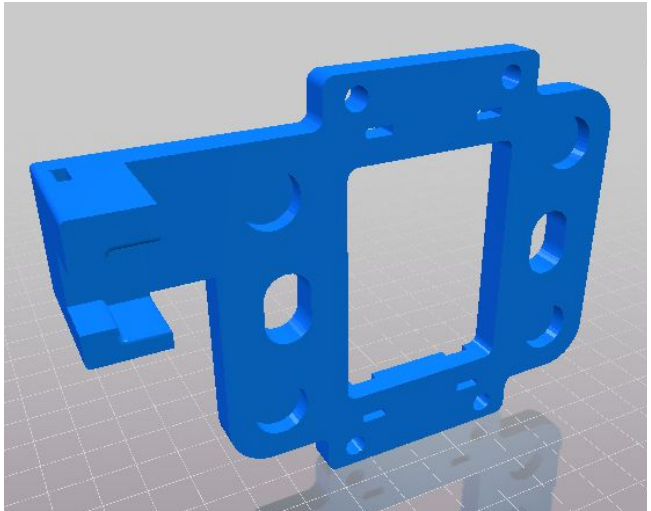

Case Study #2

Part: Gripper finger/sprocket

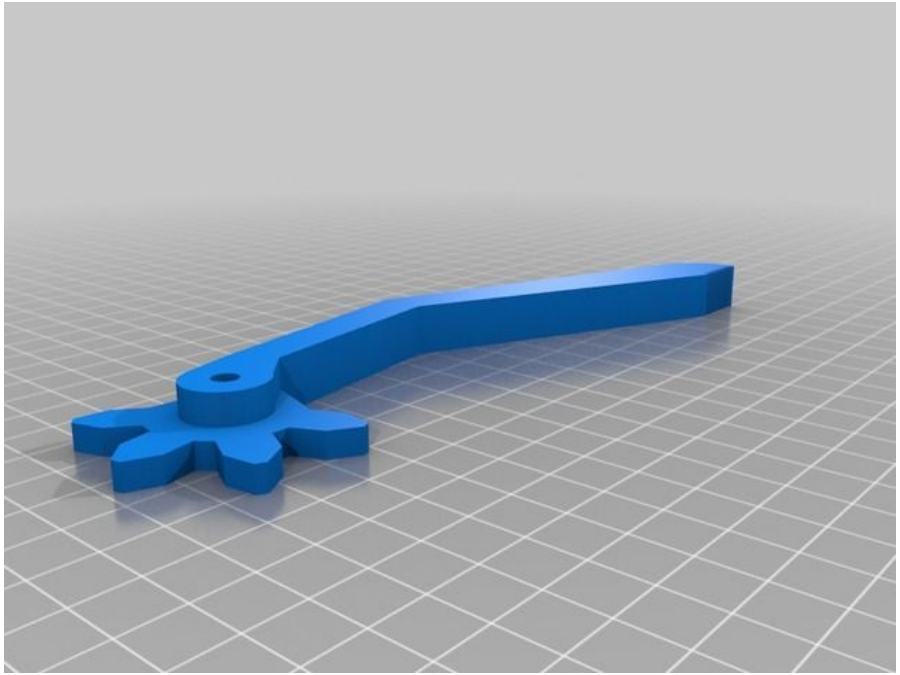

Take 3 minutes to discuss with those sitting near you how you could make this part.

Is there any other information you would want to know?

Case Study #3

Part: Pillow block bearing mount

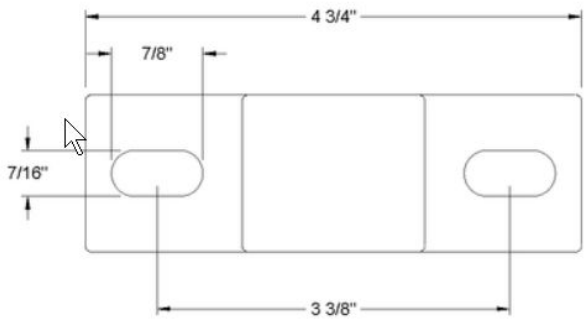

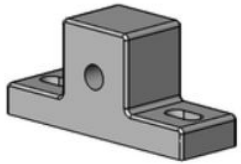

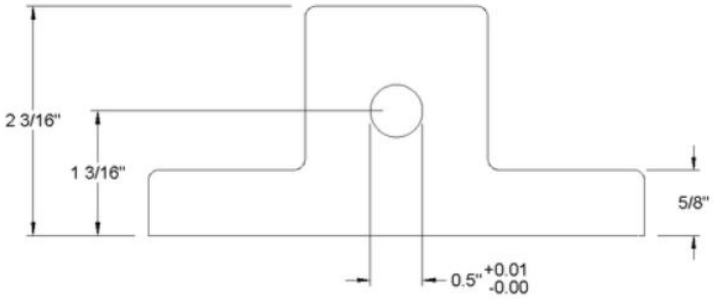

Take 3 minutes to discuss with those sitting near you how you would make this part.

Is there any other information you would want to know?

Case Study #4

Part: Gusset plate

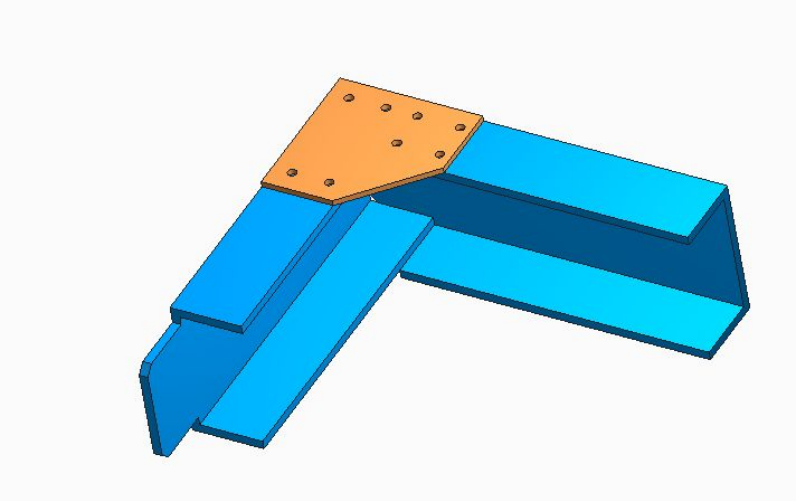

Take 3 minutes to discuss with those sitting near you how you would make this part.

Is there any other information you would want to know?

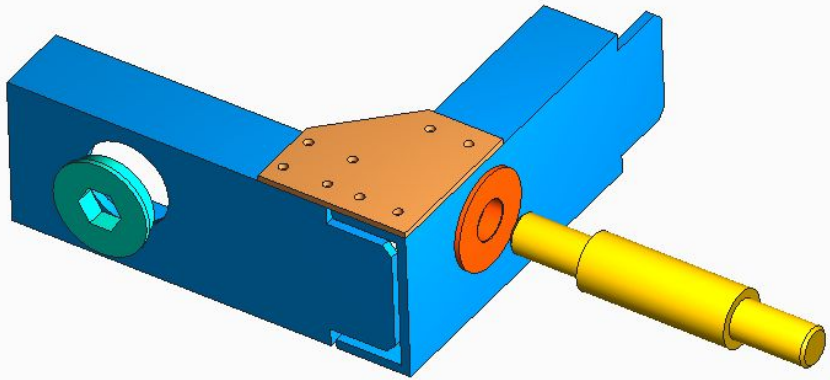

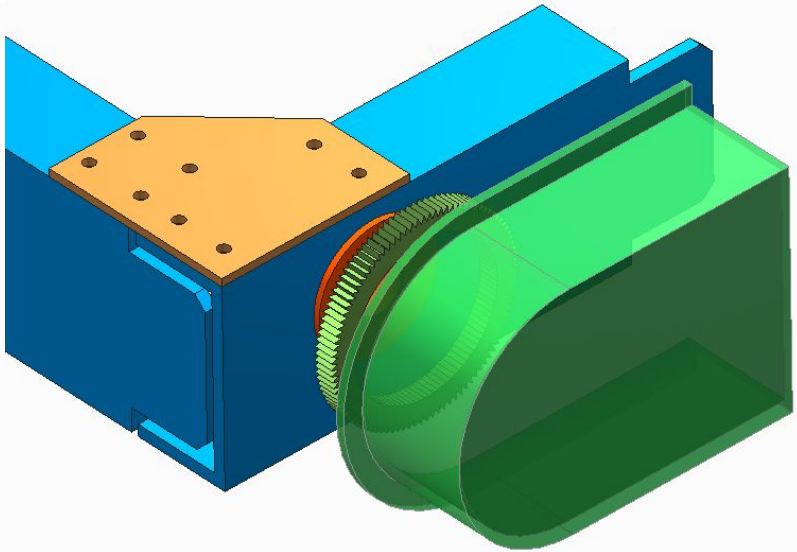

Key Questions

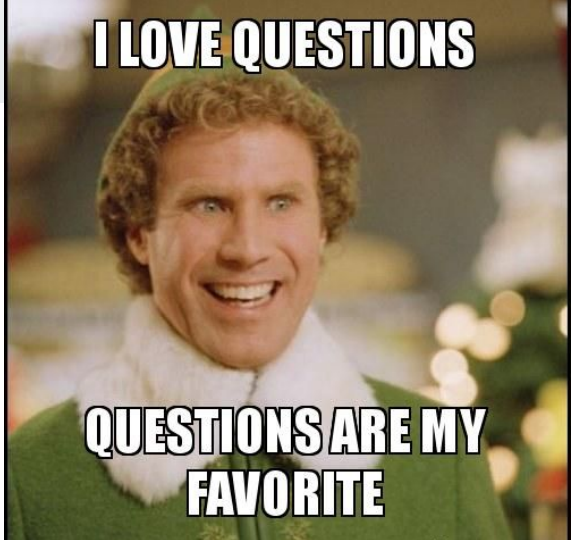

Before choosing a fabrication method, ask these questions:

- **Quantity** - How many do I need?
- **Structural Requirements**
  - What are the expected loads?
  - How much can the part deform while still performing its intended function?
  - How many load cycles are expected? 1,000 or 1,000,000?
- **Confidence** - How confident am I in the design and the assembly? Is iterative prototyping anticipated?
- **Thermal properties** - Will the part experience high temperature or UV exposure?
- **Time/urgency** - Do I need the part today or next month?
- **Design Information** - Do I have a 3D model or a napkin sketch?

Combining Methods

You don’t have to choose just one method!

Examples:

- 3D print prototype(s). Mill the final part out of metal.
- 3D print the part, but use metal threaded inserts.
- Divide a part into two easily-machinable components; weld or bolt together.
- Print or machine a mold; cast the part.

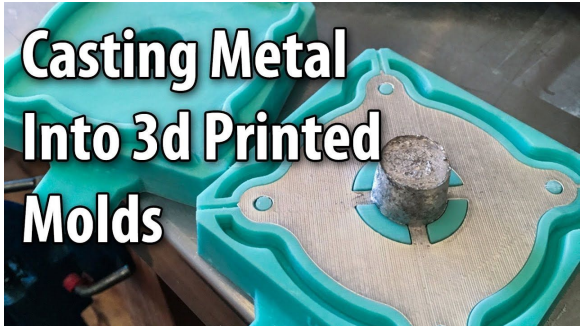

Resources and Q&A

- HCC Engineering Lab (where you are right now)
- CCBC Fab Lab
- Foundry
- 3d hubs
- Baltimore Node Hackerspace
- Open Works
- Others?

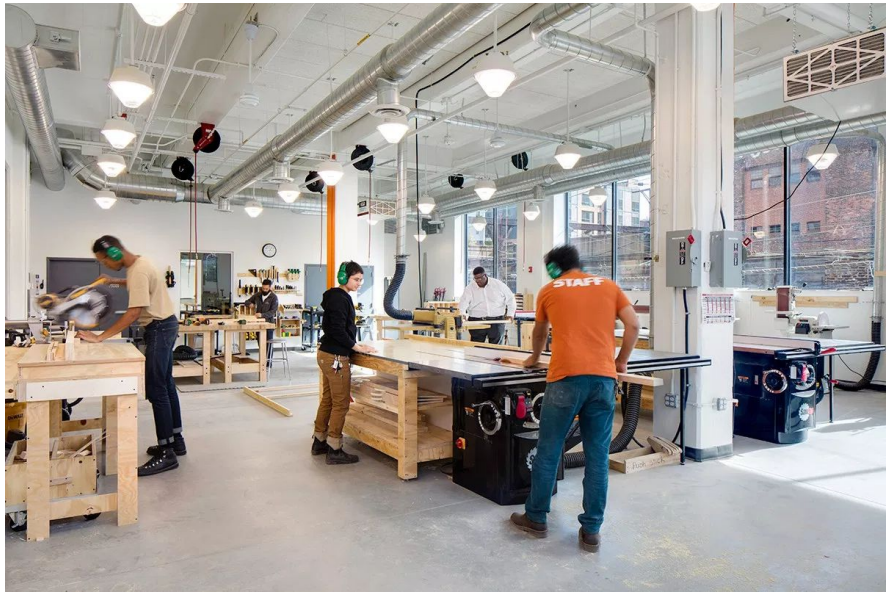

Any Questions?